DX-SMART

DX-LR20-433M22S
Module technical manual

Version: 2.0

Date：2025-01-02

深圳大夏龙雀科技有限公司

Updated records

Version	Date	Instructions	Author
V1.0	2024/12/22	Initial version	SML
V2.0	2025/01/02	Optimizing parameters	SML

Contact Us

SHEN ZHEN DX-SMART TECHNOLOGY CO.,LTD,

Email: manager@szdx-smart.com

Tel: 0755-2997 8125

Whatsapp:+86 15798463070

Website: en.szdx-smart.com

Address: 601, A1 Block, Huafengzhigu, Hang Kong Road, Hang Cheng Street, Baoan District, Shenzhen

Contents

1. Module Introduction ..... - 6 -
1.1. Overview ..... - 6 -
1.2. Features ..... - 6 -
1.3. Basic parameters ..... - 7 -
1.4. Working parameters ..... - 8 -
1.5. Fixed configuration ..... - 9 -
2. Application interface ..... - 9 -
2.1. Module pin definition ..... - 9 -
2.2. Description of the module pin definition ..... - 10 -
2.3. Reference Basic circuit ..... - 11 -
3. Electrical characteristics, RF characteristics, and reliability ..... - 12 -
3.1. Maximum rating ..... - 12 -
3.2. Static protection ..... - 13 -
4. Basic operations ..... - 14 -
4.1. Hardware design ..... - 14 -
4.2. Software writing ..... - 15 -
5. Mechanical size and layout of the recommendations ..... - 16 -
5.1. Module machinery ' ..... - 16 -

深圳大夏龙雀科技有限公司

5.2. Recommend encapsulation ..... - 17 -

5.3. Module top view/bottom view ..... - 17 -

5.4. Hardware design layout suggestions ..... - 18 -

6. Q&A ..... - 19 -

6.1. Transmission distance is not ideal ..... - 19 -

6.2. Modules are easily damaged ..... - 19 -

6.3. Bit error rate is too high ..... - 20 -

7. Storage, production and packaging ..... - 20 -

7.1. Storage conditions ..... - 20 -

7.2. Module baking treatment ..... - 21 -

7.3. Reflow soldering ..... - 21 -

7.4. Packing specifications ..... - 23 -

深圳大夏龙雀科技有限公司

Form Index - 16.

Table 1: Table of basic Parameters ..... - 7 -
Table 2: Working Parameter Table ..... - 8 -
Table 3: Fixed Configuration Table ..... - 9 -
Table 4: table ..... - 10 -
Table 5: Table of Absolute Maximum Ratings ..... - 13 -
Table 6: Recommended use conditions ..... - 13 -
Table 7: ESD withstand voltage condition Table of module pins ..... - 13 -
Table 8: ..... - 22 -

Image index

Figure 1: Module pin Definition ..... - 10 -
Figure 2: Basic circuit ..... - 12 -
Figure 3: Top view, side view and bottom view dimensions of the module ..... - 16 -
Figure 4: Proposed package size bottom view ..... - 17 -
Figure 5: Module top view and bottom view ..... - 18 -
Figure 6: Recommended reflow soldering temperature curve ..... - 22 -
Figure 7: Carrier size (in millimeters) ..... - 23 -
Figure 8: Reel size (in millimeters) ..... - 24 -
Figure 9: Reel orientation ..... - 24 -

深圳大夏龙雀科技有限公司

1. Module Introduction

1.1. Overview

DX-LR20-433M22S is a low-power ultra-long distance LoRa pure RF hardware module, 430-470MHz frequency band use, is built by SHEN ZHEN DX-SMART TECHNOLOGY CO.,LTD, . for intelligent wireless data transmission, using LLCC68 chip, chip internal integrated output maximum 22dBm power amplifier, Anti-interference performance and communication distance have been further improved, with low power consumption, high performance, long distance and other advantages.

Since this module is pure RF hardware, it is necessary to use MCU drivers or use specialized SPI debugging tools.

1.2. Features

Features:

- Output power: +22dBm
- Maximum receiving sensitivity: -125dBm (BW=125, SF=7)
- Open visible distance up to 8km (for reference only, the actual distance is subject to the actual measurement)

Module parameters:

- Working voltage: 1.8V~3.7V (typical value: 3.3V)
- Support working frequency range: 430-470MHz
- External antenna
- Working temperature: - 40 ~ + 85 ℃

Note: the current module USES is removing crystals, when the bandwidth is less than 125 k of the following may be the cause of deviation is too big, need to use the bandwidth below 125 k, please contact our business personnel to customize.

深圳大夏龙雀科技有限公司

1.3. Basic parameters

Table 1: Table of basic parameters1

Parameter names	Description	Remarks	
Reference distance	8km	In a clear and open environment, with an antenna height of 3 meters, the air rate is 244 bit/s.	SF:12 CR:4/6 BW:125 frequency band:433
FIFO	256Byte	A single send maximum length	
Crystal frequency	32MHz	-	
Modulation	LoRa	LoRa modulation is recommended	
Encapsulation method	Patch type	-	
Interface method	Stamp hole	-	
Communication interface	SPI	0~10Mbps	
Dimensions	20.0(L) x 14.0 (W) x 2.3(H) mm	Shield hood included	

深圳大夏龙雀科技有限公司

Rf interface	Stamp hole /IPEX	-

1.4. Working parameters

Table 2: working parameter table2

Parameter names		Details			Notes
		Minimum	Typical value	Maximum value	
Operating voltage (V)		1.8	3.3	3.7	≥3.3V ensures output power
Communication level (V)		-	3.3	-	Use a 5V TTL with a risk of burning
Operating temperature (C)		-40	-	85	Industrial grade design
Operating frequency band (MHz)		430	-	470	Supports ISM
Power consumption	Transmit current (mA)	-	100	-	Instantaneous power consumption
	Received current (mA)	-	6.5	-	-
	Standby current (nA)	-	180	-	Software turn-off
transmitted power (dBm)		0	-	22	-

Receiving sensitivity (dBm)		-	-125	-	BW=125 and SF=7
Air rate	LoRa(bps)	-	-	-	User programmed control

1.5. Fixed configuration

Table 3: Fixed Configuration Table 3

BW (bandwidth)	SF (spread spectrum factor)
BW=125kHz	5-6-7-8-9
BW=250kHz	5-6-7-8-9-10
BW=500kHz	5-6-7-8-9-10-11

Notes

For example: SF can only be 5-6-7-8-9 when BW is 125KHZ

2. Application interface

2.1. Module pin definition

深圳大夏龙雀科技有限公司

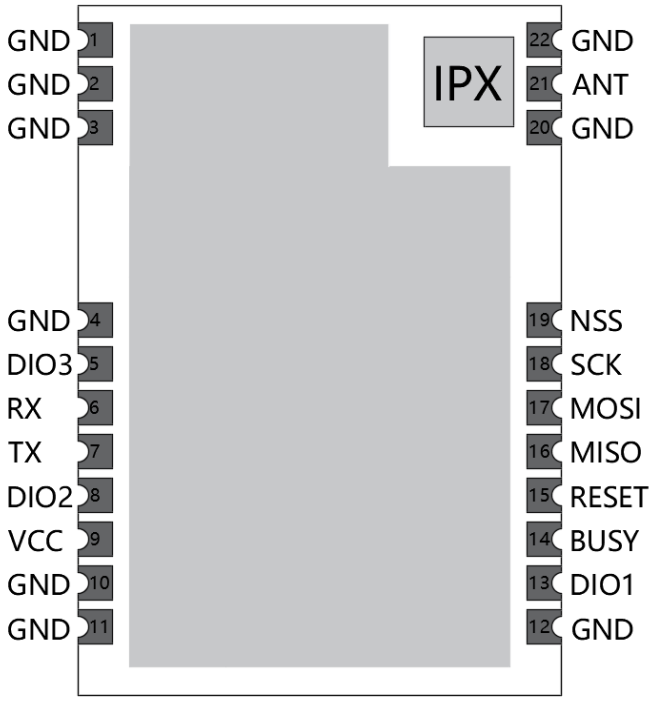

Figure 1: Module pin definition1

2.2. Description of the module pin definition

Table 4: Module Pin Definition Description Table 4

Pin serial number	Pin name	Pin function	Instructions
1,2,3,4,10,11,12,20,22	GND	Power ground	-
5	DIO3	Multi-function digital input/output - External TCXO power supply voltage	Input/output
6	RX	Antenna toggle switch	To switch the reception
7	TX	Antenna toggle switch	Used to switch transmissions

8	DIO2	Multipurpose digital input/output/RF band switching control	Input/Output
9	VCC	Power input pin	3.3V(typical value)
13	DIO1	Multipurpose digital input/output	Input/output
14	BUSY	Used for status indication	-
15	RESET	Reset the feet	-
16	MISO	SPI data output pin	-
17	MOSI	SPI data input pin	-
18	SCK	SPI clock input pin	-
19	NSS	Module pieces select pins for starting an SPI communication	-
21	ANT	Rf interface	-

2.3. Reference Basic circuit

深圳大夏龙雀科技有限公司

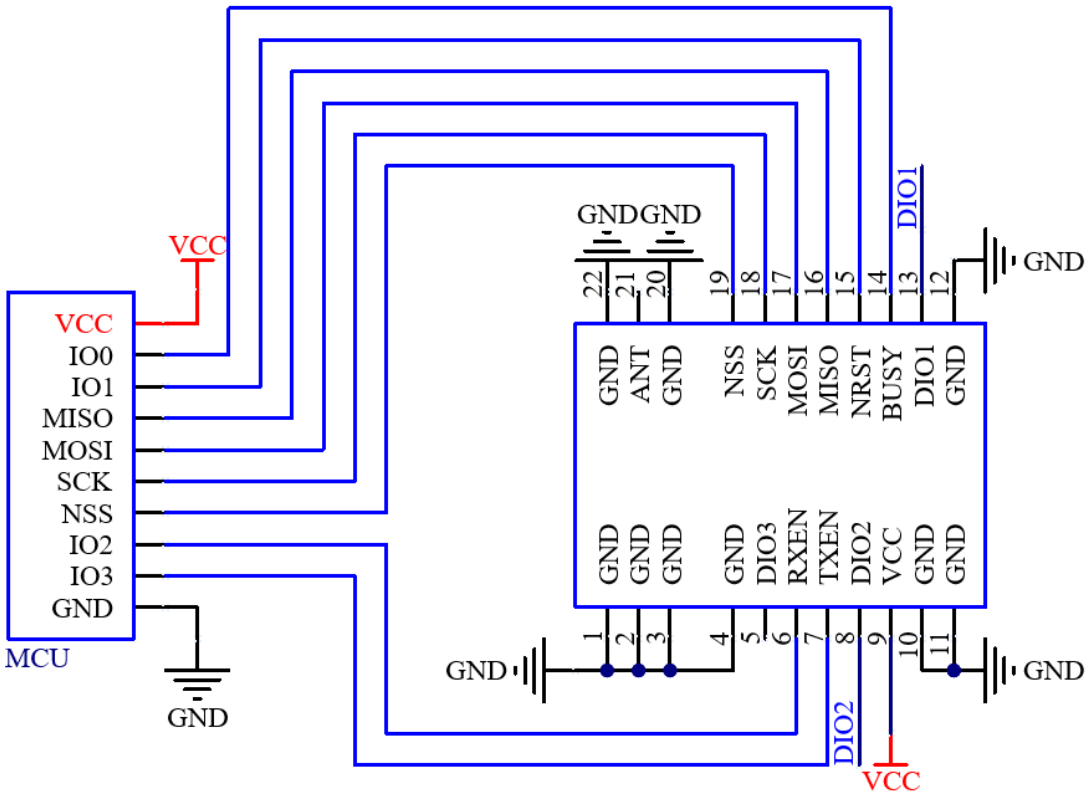

Figure 2: Basic circuit2

3. Electrical characteristics, RF characteristics, and reliability

3.1. Maximum rating

Pressure in excess of the absolute maximum rating may cause permanent damage to the equipment. These are stress ratings only, so there is no implied device at these or any other conditions than manual operation part indicated by under the function of the operation. Long exposure to the absolute maximum rating conditions may affect the reliability of the equipment.

Table 5: absolute maximum rating table5

Parameters	Minimum	The maximum	Units
VCC	-0.5	3.7	V
Storage temperature range	-55	+125	℃

Table 6: Recommended conditions of use6

Parameters	The minimum value	Typical value	Maximum value	Units
VCC	1.8	3.3	3.7	V
Operating temperature range (TA)	-40	-	+85	℃

3.2. Static protection

In module applications, such as charged the friction between the human body static electricity, microelectronics produced electrostatic, discharge through various channels to module, may cause certain damage to module, so the ESD protection should be taken seriously. ESD protection measures should be taken in the process of research and development, production, assembly and testing, especially in product design. For example, at the interface of the circuit design and the point susceptible to electrostatic discharge damage or influence, anti-static protection should be increased, and anti-static gloves should be worn in production.

Table 7: the module for the ESD withstand voltage of pin table7

Symbol	Description	Max	Units
ESD_HBM	American National Institute for Standardization/Electronic Systems Design Association/Associated Electronic Equipment Manufacturing Chamber of Commerce Standard JS-001-2014 (mannequins) Category 2	+2	kV
ESD_CDM	ESD charging device model, JEDEC standard JESD22-C101D, three levels	+1	kV

4. Basic operations

4.1. Hardware design

- It is recommended to use DC regulated power supply to power the module, and the power ripple coefficient should be as small as possible, and the module should be reliably grounded.
- Please pay attention to the correct connection of the positive and negative poles of the power supply, such as reverse connection may lead to permanent damage to the module;
- Please check the power supply, ensure the recommended between the power supply voltage, such as more than the maximum permanent damage will cause the module;
- Please check the stability of the power supply, the voltage can not fluctuate greatly and frequently;
- When designing the power supply circuit for the module, it is often recommended to reserve more than 30% of the margin, which is conducive to the long-term stable work of the whole machine;
- The module should try to stay away from the power supply, transformer, high-frequency line and other parts of the large electromagnetic interference;
- High frequency digital go line, high frequency analog line, power line must avoid modules below, if you really need to pass beneath the module to suppose module welded on the Top Layer, the module contact part of the Top Layer of floor copper (copper and entire store good grounding), must be close to the module part Numbers and line on Bottom Layer;
- Suppose modules welding or placed on the Top Layer, the Bottom Layer Layer or other random walk line is wrong, will affect module in varying degrees of stray and receiving sensitivity;
- Suppose around module have larger electromagnetic interference devices would greatly influence the performance of the module, according to the strength of the interference advice from appropriate modules, if conditions allow can do appropriate isolation and blocking.

深圳大夏龙雀科技有限公司

- Assuming that module is electromagnetic interference around go line (high-frequency, high frequency simulation, power line) will greatly influence the performance of the module, according to interfere with the strength of the advice from appropriate modules, if conditions allow can do appropriate isolation and blocking.
- Telecommunication lines if use 5 v level, must be 1 k to 5.1 k series resistor (not recommended, there is still a risk of damage);
- As far as possible away from the part of the physical layer also 2.4 GHz TTL agreement, for example: start;
- Antenna installation structure has a great impact on the performance of the module, be sure to ensure that the antenna is exposed, preferably vertical. When the module is installed inside the shell, high-quality antenna extension cable can be used to extend the antenna to the outside of the shell;
- The antenna must not be installed inside the metal shell, which will greatly weaken the transmission distance;
- It is recommended to increase the protection resistance of 200R in the RXD/TXD of the external MCU.

4.2. Software writing

- This module is LLCC68+ peripheral circuit, users can operate in accordance with LLCC68 chip book;
- DIO1, DIO2, DIO3 are general IO ports, which can be configured into a variety of functions; Of DIO2 can connect with TXEN, not connected to the MCU IO mouth, rf switch is used to control the emission, see LLCC68 manual, if does not use can be suspended;
- LLCC68 with SX1262 / SX1268 difference:

1、SX1262 / SX1268 support spreading factor SF5, SF6 and SF7, SF8, SF9, SF10, SF11, SF12;

LLCC68 support spreading factor SF5, SF6, SF7, SF8, SF9, SF10, SF11.

2, LLCC68 spreading factor and receiving bandwidth can be set up:

LoRa® Rx/Tx , BW= 125 - 250 - 500 kHz ,

LoRa® , SF= 5 - 6 - 7 - 8 - 9 for BW=125 kHz ,

LoRa® , SF= 5 - 6 - 7 - 8 - 9 - 10 for BW=250 kHz ,

LoRa® , SF= 5 - 6 - 7 - 8 - 9 - 10 - 11 for BW=500 kHz。

5. Mechanical size and layout of the recommendations

This section describes the mechanical dimensions of the module, all dimensions are in millimeters; All dimensions not marked with tolerances with tolerances of ±0.3 mm.

5.1. Module machinery '

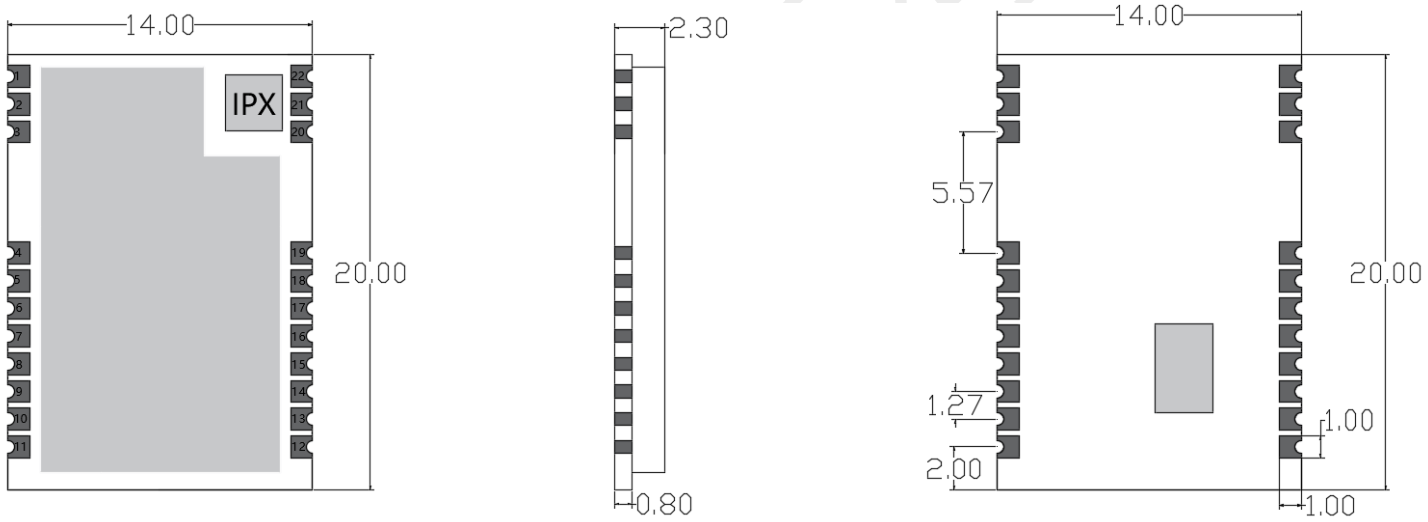

Figure 3: Module size chart for top view, side view and bottom view3

5.2. Recommend encapsulation

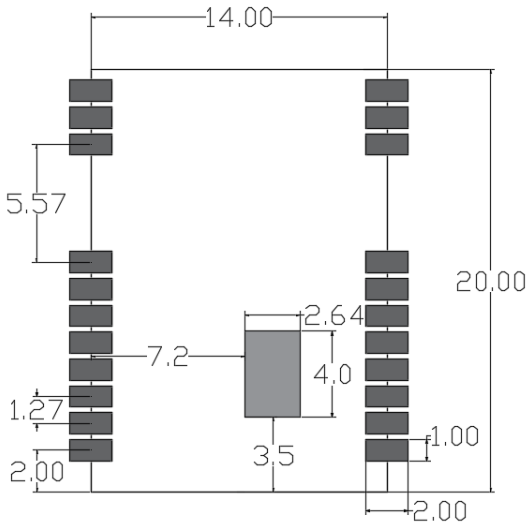

Figure 4: Bottom view of recommended package size

4

5.3. Module top view/bottom view

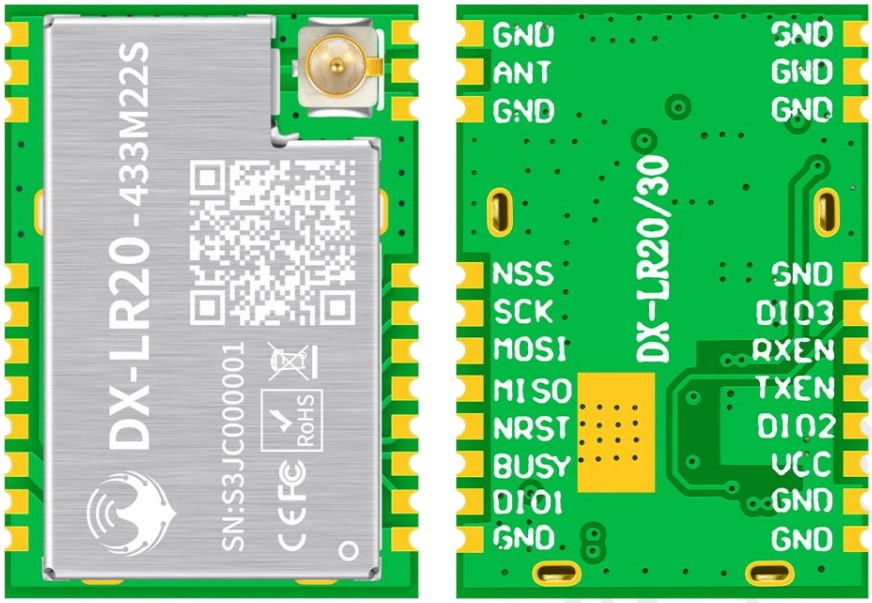

Figure 5: Module top view and bottom view5

Notes

The above picture is for reference only, please refer to the actual product appearance and label information of the module.

5.4. Hardware design layout suggestions

The DX-LR20-433M22S module works in the 430M-470M frequency band and uses an external antenna. The standing Wave ratio (VSWR) and efficiency of the antenna depend on the position of the patch. The influence of various factors on the wireless receiving and transmitting signal should be avoided as much as possible.

1, surrounding the LR20-433M22S product shell to avoid the use of metal, when using part of the metal shell, should try to keep the module antenna part away from the metal part. The metal connection wire or metal screw inside the product should be kept away from the module antenna part as far as possible.

2, module antenna should depend on the load board PCB edge place or the load board directly, as far as possible don't placed on board.

3. It is recommended to use insulating materials to isolate the module mounting position on the substrate, such as putting a whole screen print (TopOverLay) at the position.

6. Q&A

6.1. Transmission distance is not ideal

- When there is a straight line communication barriers, communication distance will corresponding attenuation;
- Temperature, humidity, the same frequency interference, will lead to increased communication packet loss rate;
- The ground absorbs and reflects radio waves, and the test effect is poor near the ground.
- Water has a strong ability to absorb the radio waves, so the sea test effect is poor.
- There are metal objects near the antenna, or placed in a metal shell, the signal attenuation will be very serious;
- Power register setting error, high air rate setting (the higher the air velocity, the closer distance);
- Power supply voltage is lower than the recommended value at room temperature, the lower the voltage transmission power is smaller;
- Poor matching degree between the antenna and the module or the quality of the antenna itself.

6.2. Modules are easily damaged

- Please check the power supply to ensure that between the recommended supply voltage, if exceed the maximum value will cause permanent damage to the module;
- Please check the stability of the power supply, the voltage can not fluctuate greatly and frequently;

深圳大夏龙雀科技有限公司

- Please ensure the anti-static operation during installation and use, and the electrostatic sensitivity of high-frequency devices;
- Please ensure that the humidity should not be too high during installation and use, some components are humidity sensitive devices;
- If there is no special demand, it is not recommended to use at too high or too low temperature.

6.3. Bit error rate is too high

- Nearby with the same frequency signal interference, away from interference sources or modify the frequency, channel to avoid interference;
- SPI clock waveform is not standard, check whether there is interference on the SPI line, SPI bus line should not be too long;
- Power supply is not ideal may also cause garbled code, be sure to ensure the reliability of the power supply;
- Extension line, feeder quality is poor or too long, will also cause a high error rate.

7. Storage, production and packaging

7.1. Storage conditions

Modules are shipped in vacuum-sealed bags. The module has a humidity sensitivity class of 3 (MSL 3), and its storage is subject to the following conditions:

1. Recommended storage conditions: temperature 23±5°C and relative humidity of 35~60%.

2. Under the recommended storage conditions, the module can be stored in a vacuum sealed bag for 12 months.

深圳大夏龙雀科技有限公司

3. The unsealed workshop life of the module is 168 hours under workshop conditions of 23±5°C and relative humidity below 60%. Under these conditions, the module can be directly used for reflux production or other high temperature operation. Otherwise, it is necessary to store the module in an environment with relative humidity less than 10% (for example, a moistureproof cabinet) to keep the module dry.

4. If the module is under the following conditions, it is necessary to pre-bake the module to prevent the PCB foaming, cracking and delamination after the module is wet and damp and then welded at high temperature:

- Storage temperature and humidity do not meet the recommended storage conditions
- The module fails to complete production or storage according to Clause 3 above after unpacking
- Vacuum packaging leakage, materials in bulk
- Before module repair

7.2. Module baking treatment

- It needs to be baked at 120±5°C for 8 hours at high temperature
- The second baked module must be welded within 24 hours after baking, otherwise it still needs to be stored in the drying oven

Notes

1. In order to prevent and reduce the occurrence of bad welding such as foaming and delimitation caused by moisture, the module should be strictly controlled. It is not recommended to be exposed to the air for a long time after opening the vacuum package.
2. Before baking, it is necessary to remove the module from the package and place the bare module on the high temperature resistant appliance to avoid high temperature damage to the plastic tray or reel; The second baking module must be completed within 24 hours after baking welding, otherwise it needs to be stored in the drying oven. Please pay attention to ESD protection when unpacking and placing the module, for example, wear anti-static gloves.

7.3. Reflow soldering

Use a printing scraper to print solder paste on the screen plate, so that the solder paste is leaked to the PCB through the opening of the screen plate, and the printing scraper strength needs to be adjusted appropriately. In order to ensure the quality of the module paste, the thickness of the steel mesh corresponding to the module pad part is recommended to be 0.1~0.15mm.

The recommended reflow soldering temperature is 235~250 °C, and the maximum temperature should not exceed 250 °C. To avoid damage to the module due to repeated heat exposure, it is highly recommended that customers do not attach the module until the first side of the PCB has been reflow soldered. The recommended furnace temperature curve (lead-free SMT reflow soldering) and related parameters are shown in the following chart:

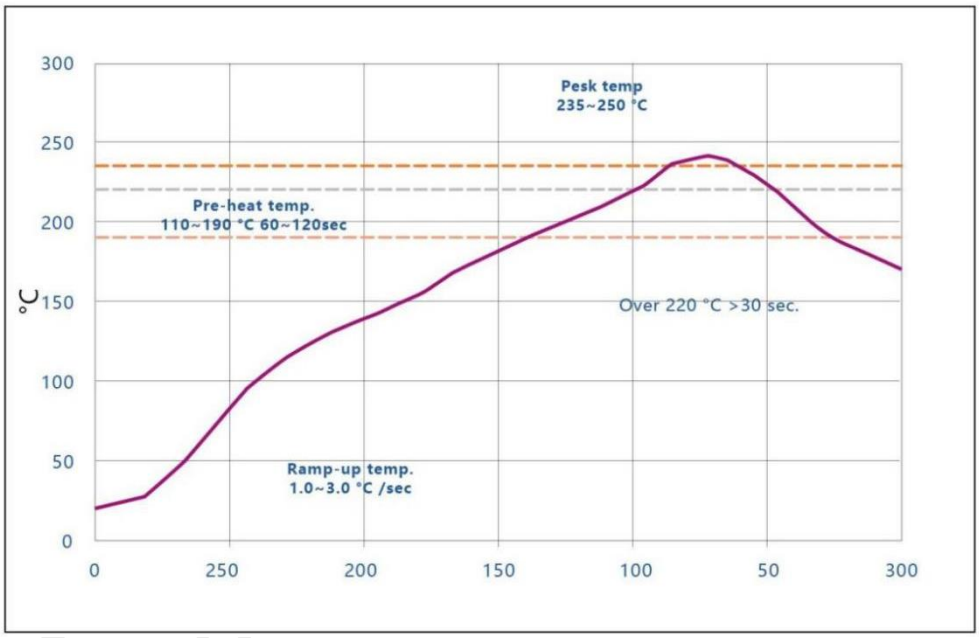

Figure 6: Recommended reflow soldering temperature curve 6

Table 8: Recommended reflow soldering temperature8

Statistical name	Lower limit	Upper limit	Units
Slope 1 (target =2.0) is between 30.0 and 70.0	1	3	Degrees/SEC
Slope 2 (target =2.0) is between 70.0 and 150.0	1	3	Degrees/SEC
Slope 3 (target =-2.8) is between 220.0 and	-5	-0.5	Degrees/SEC

150.0			
Constant temperature time 110-190 ° C	60	120	seconds
@220C reflux time	30	65	seconds
Peak temperature	235	250	Celsius
@235 ° C total time	10	30	seconds

7.4. Packing specifications

The DX-LR20-433M22S module is packaged in roll tape and enclosed in a vacuum sealed bag with desiccants and humidity cards. Each carrier is 20.4 meters long, contains 1200 modules, and the reel is 330 mm in diameter. The specifications are as follows:

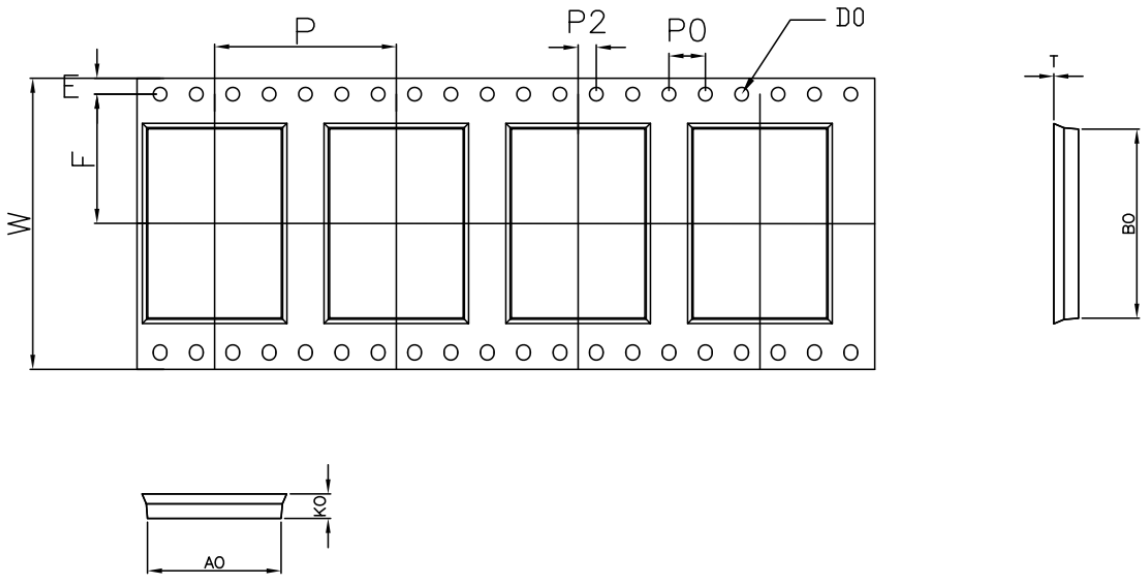

W	32.00±0.30	P	20.00±0.10	A0	14.30±0.10	B0	20.40±0.10
S0	———	P0	4.00±0.10	A1		B1	
E	1.75±0.10	P2	2.00±0.10	A2		B2	
F	14.2±0.10	D0	$\phi 1.50^{+0.10}_{-0}$	K0	2.70±0.10		
T	0.30±0.05	D1		K1			

Figure 7: Strap size (unit: mm)7

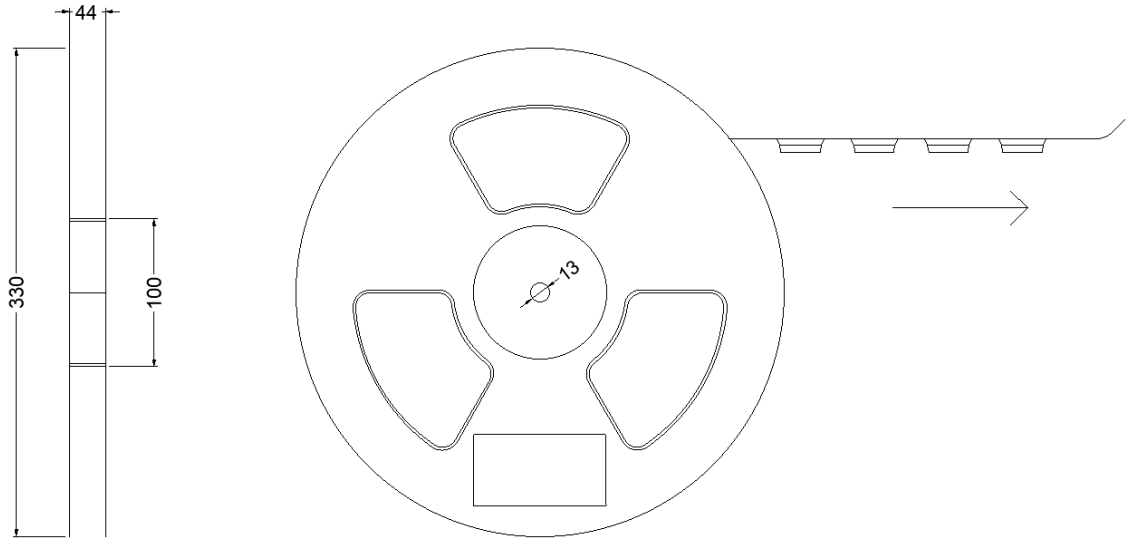

Figure 8: Reel size (unit: mm)8

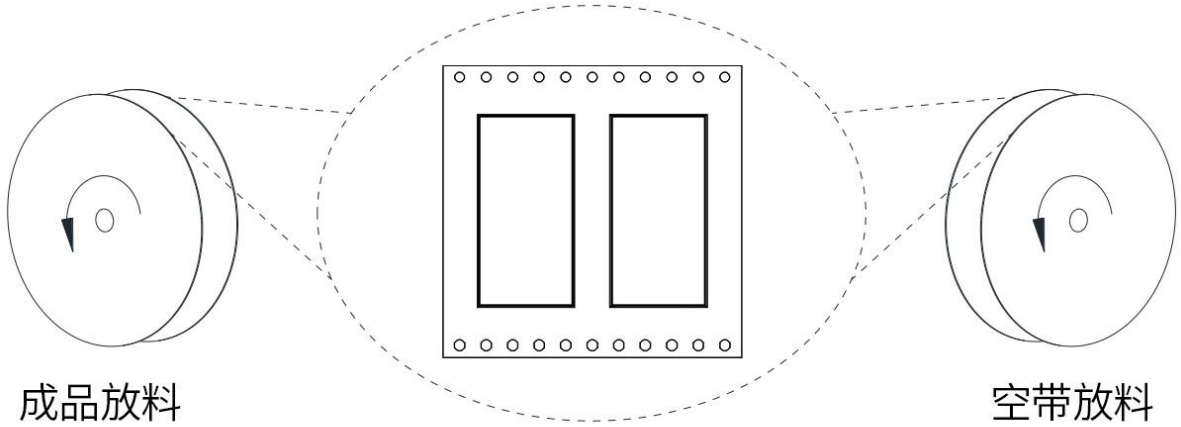

Figure 9: Reel orientation9